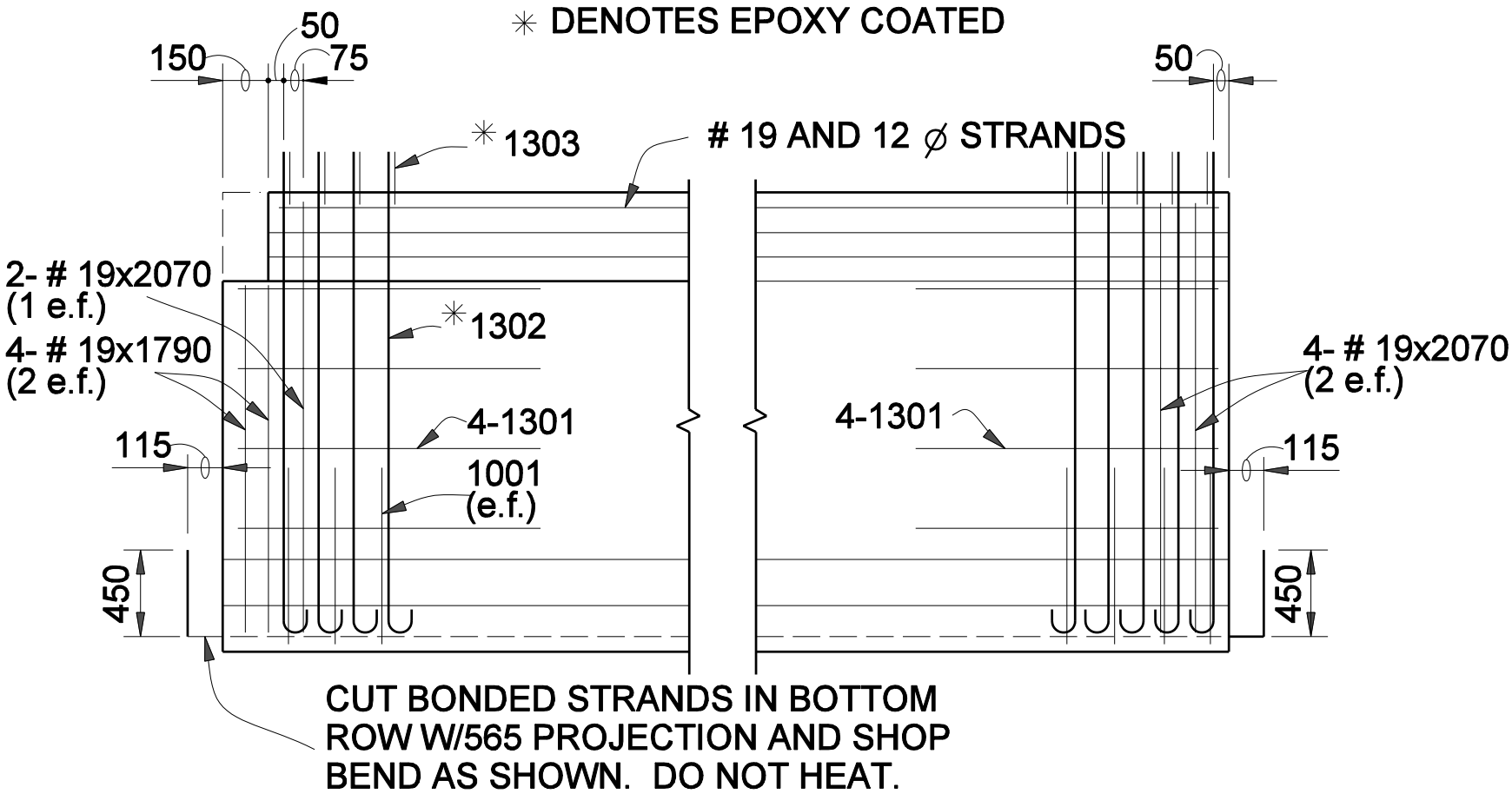


BULB - TEE BEAM (2134 DEEP)

ELEVATIONS

SHOWING END REINFORCING

gure 63-14DD